Assembly Guide

Elof assembly

WE ARE **LIBRARY PEOPLE** ®

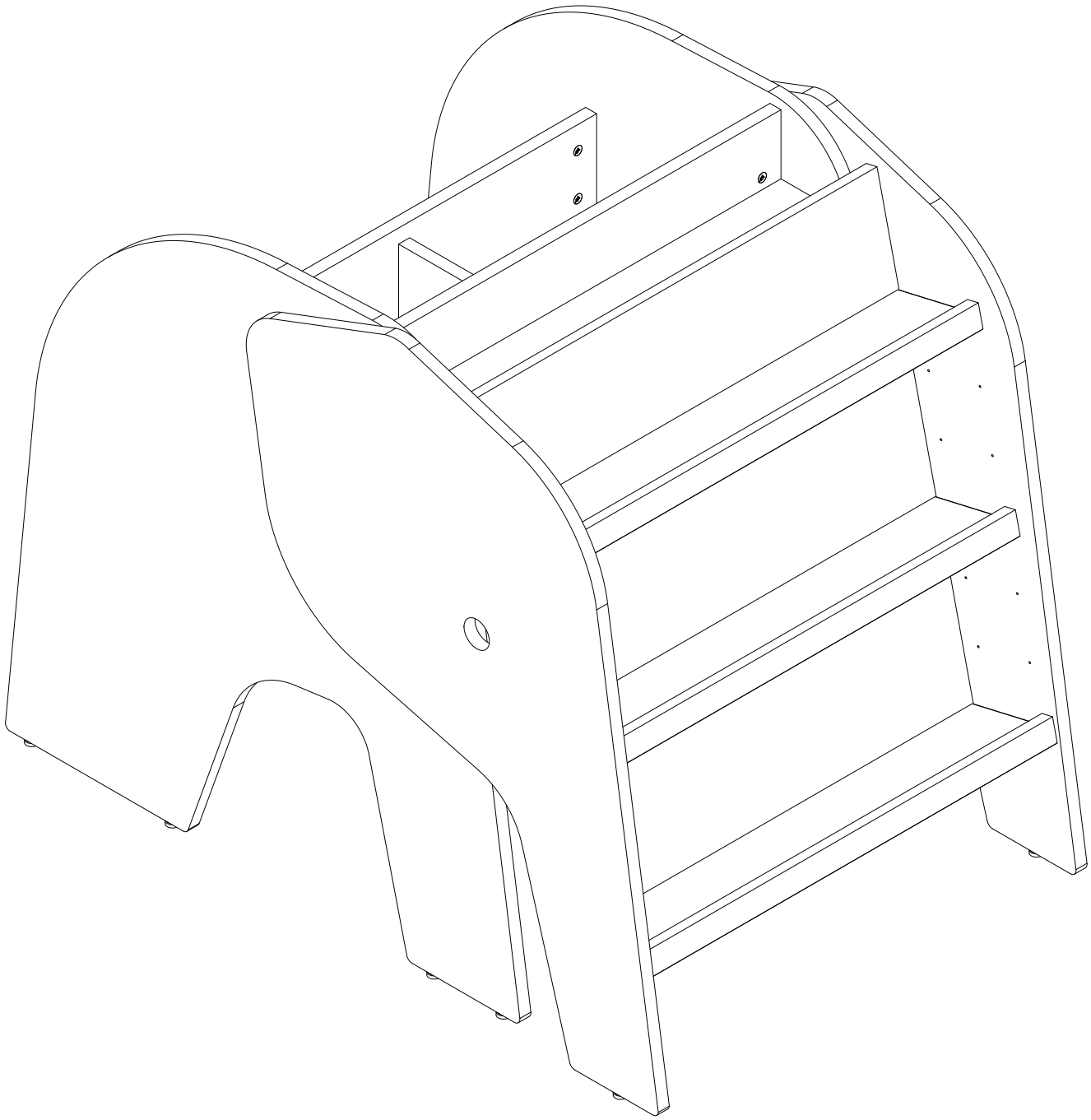

Sheet: 1 / 8

1

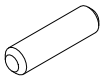

68 x A

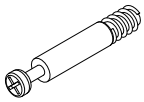

42 x B

42 x C

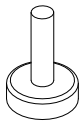

10 x D

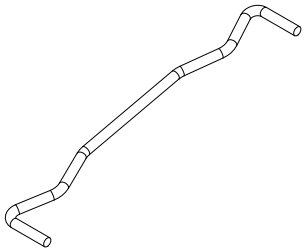

10 x E

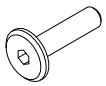

6 x F

2

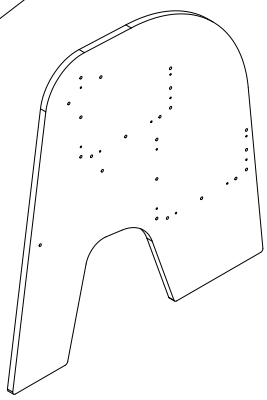

1 x G

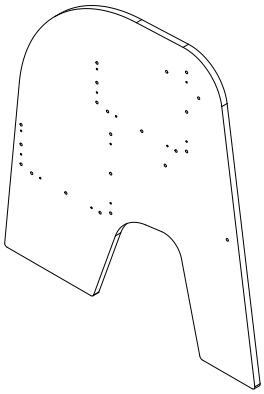

1 x H

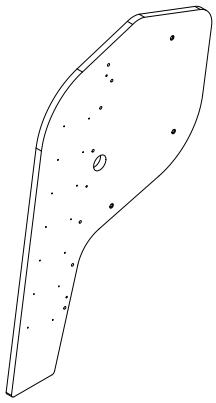

1 x I

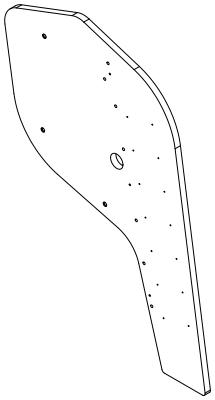

1 x J

3

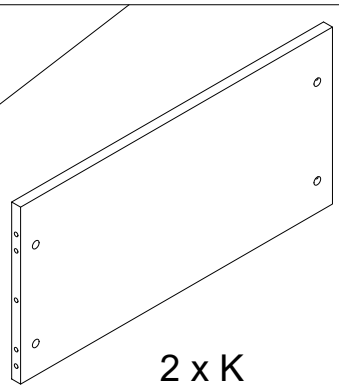

2 x K

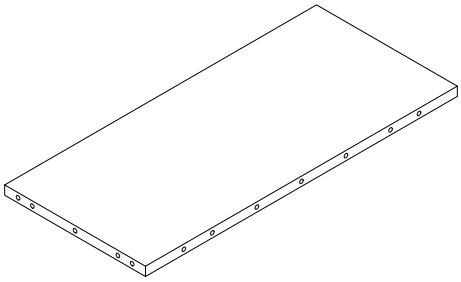

2 x L

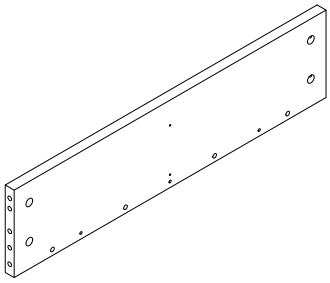

2 x M

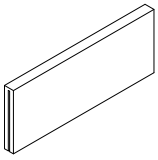

2 x N

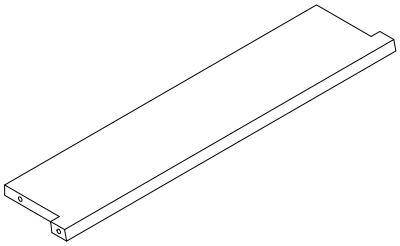

1 x O

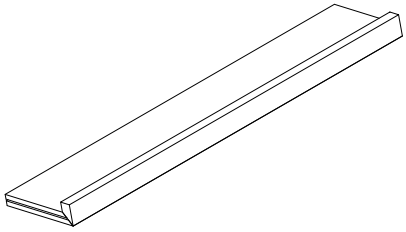

4 x P

4

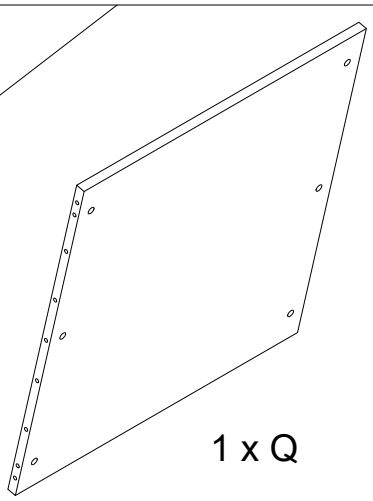

1 x Q

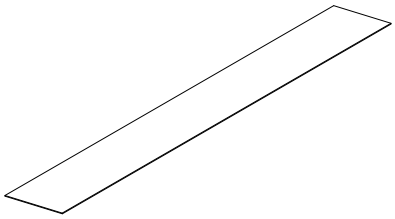

4 x R

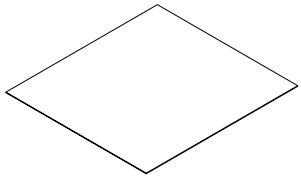

4 x S

5

x 2

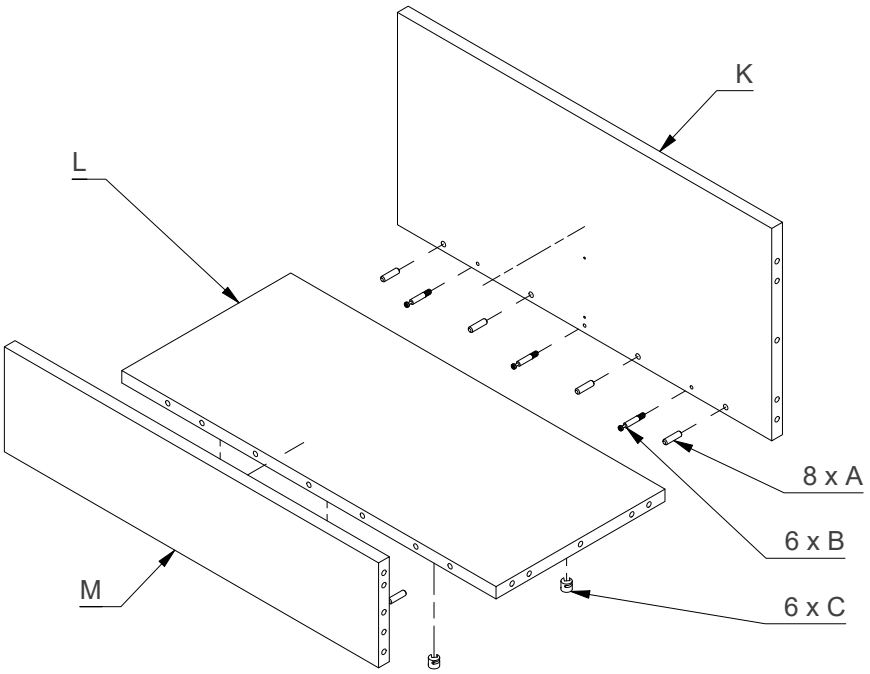

6

x 2

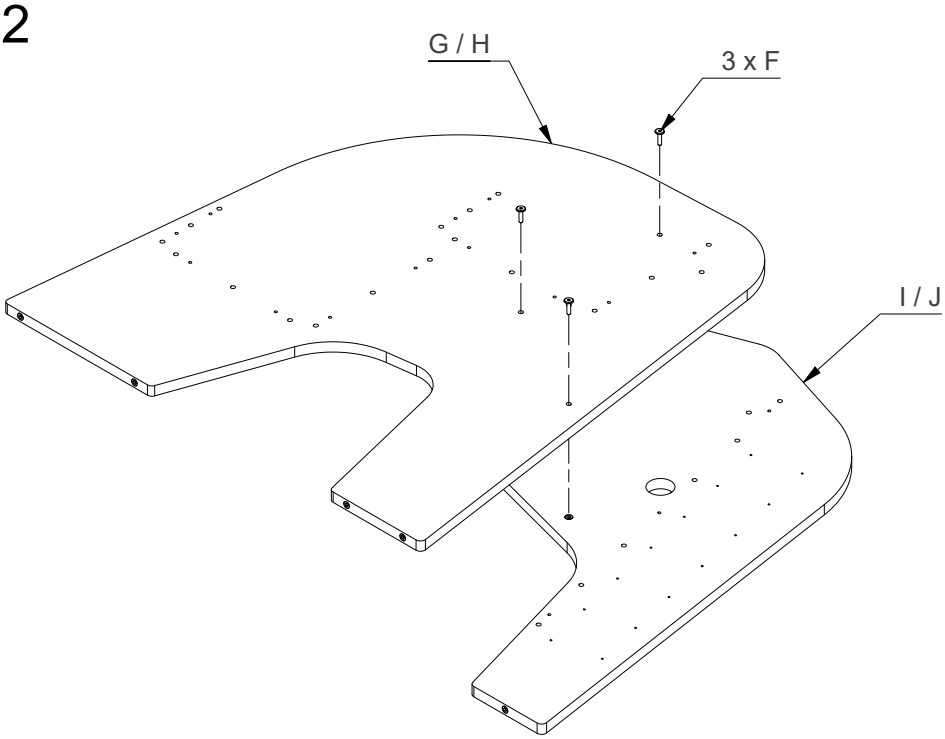

7

x 2

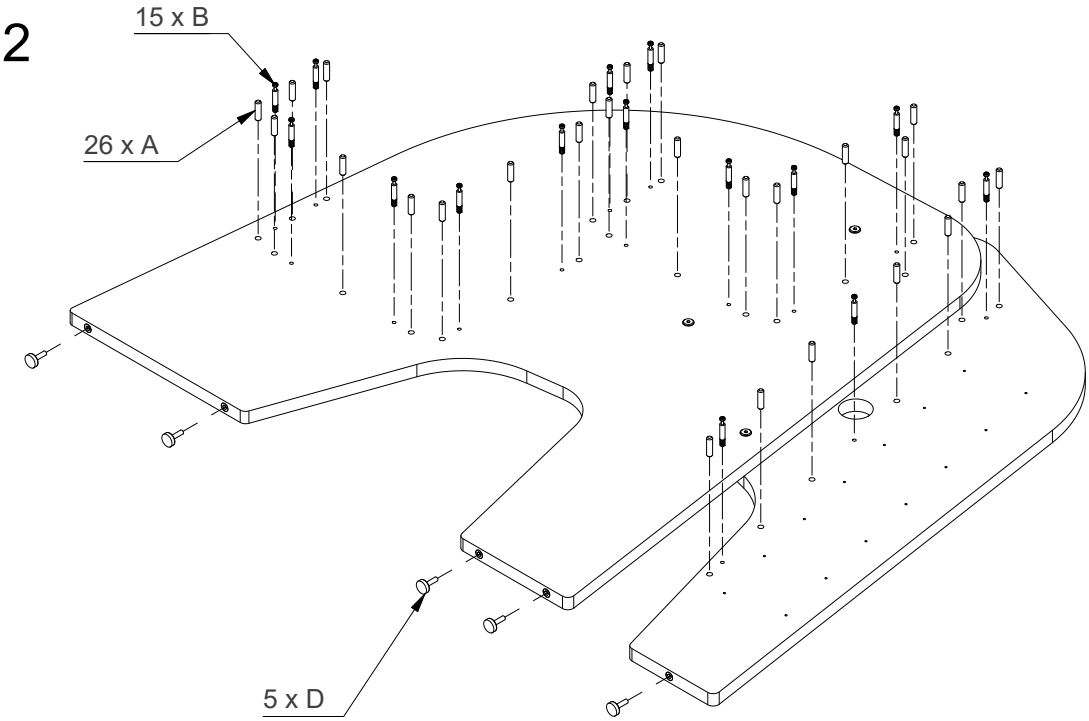

8

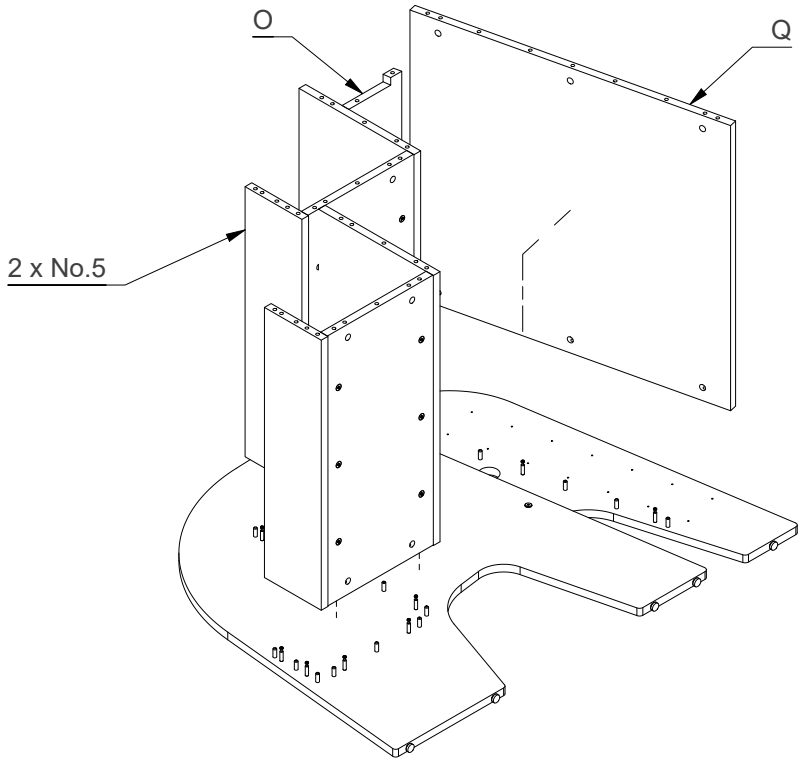

9

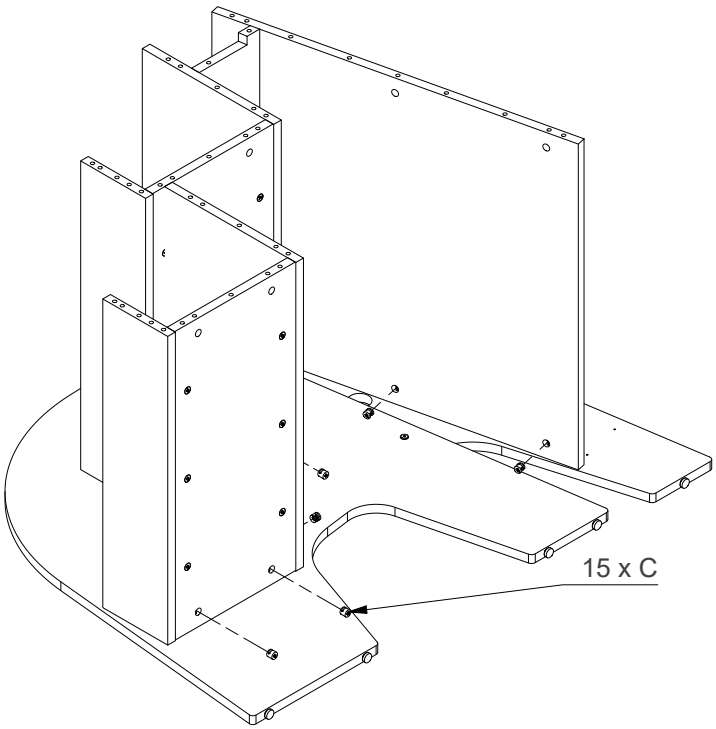

10

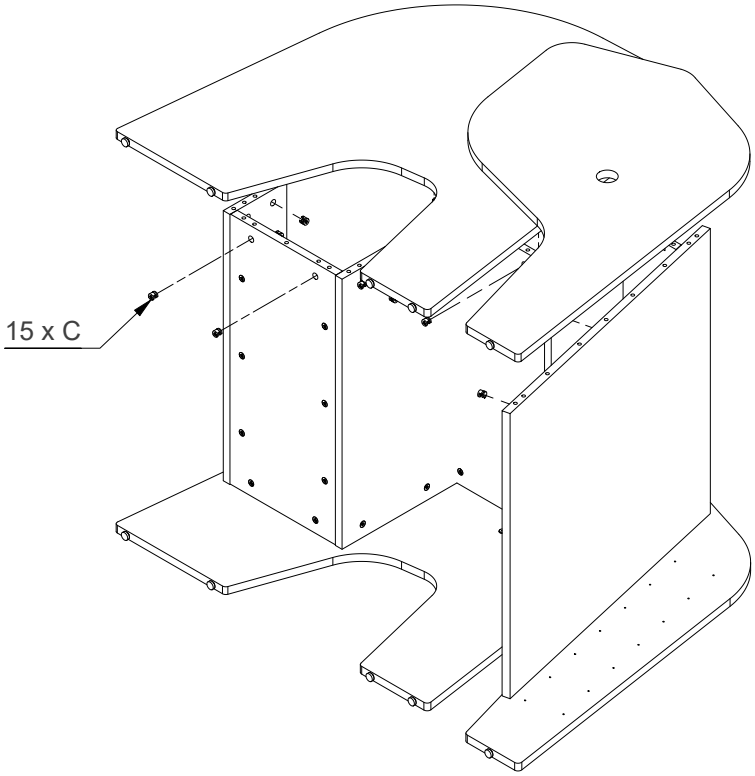

11

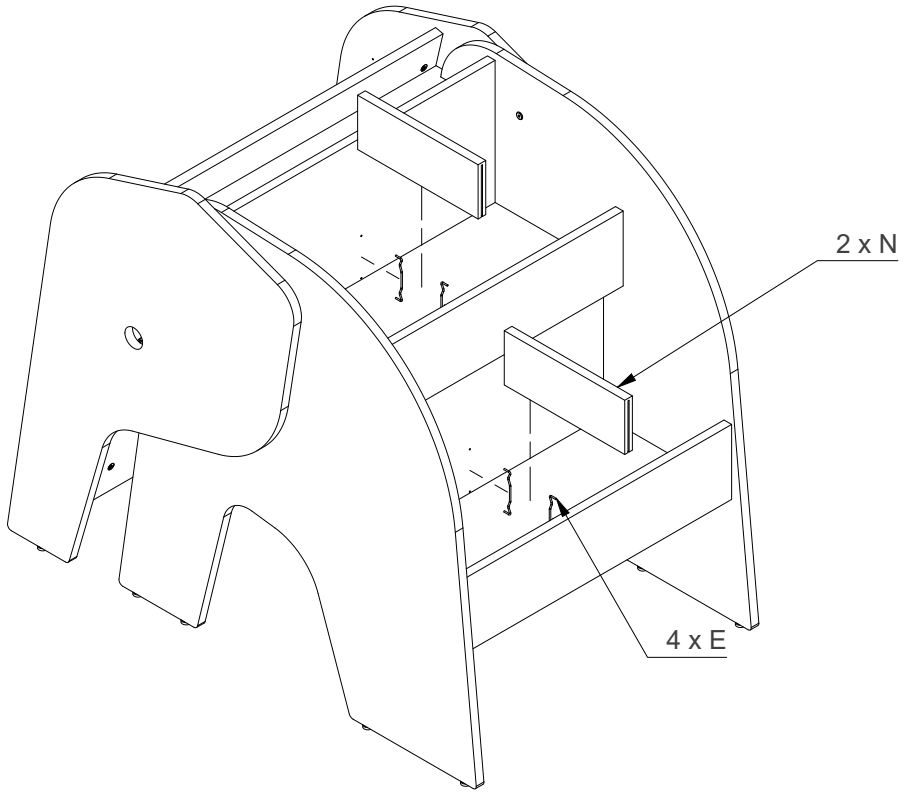

12

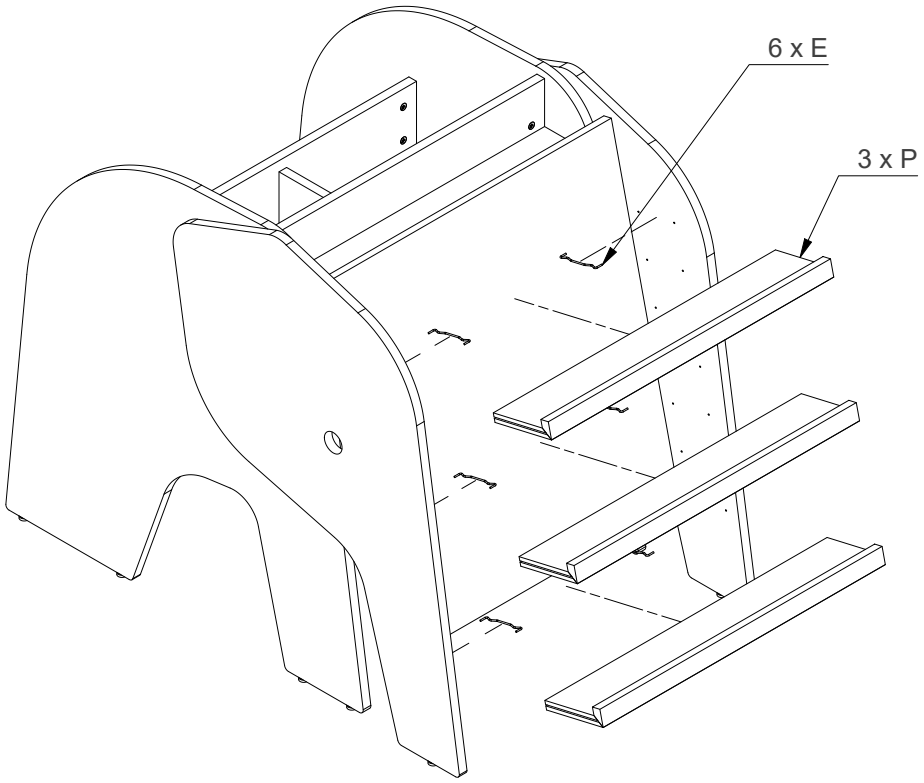

13

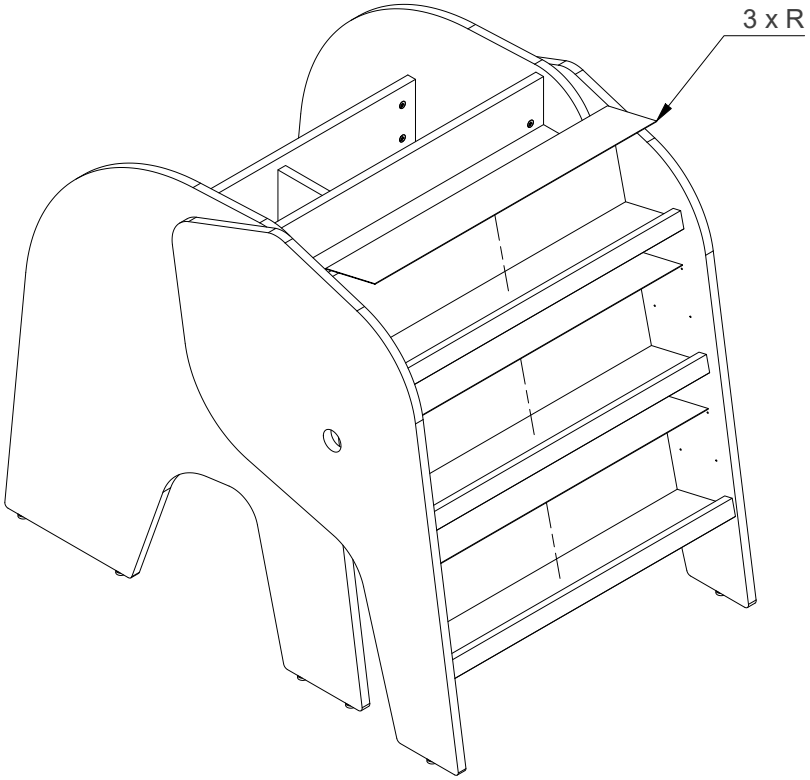
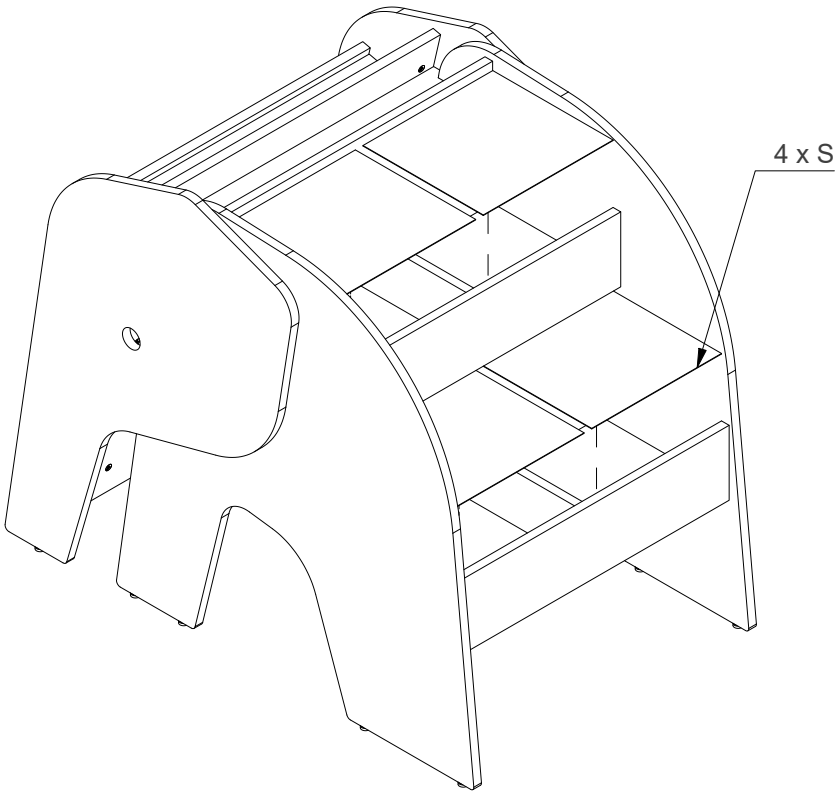
14